natural continuation. Even if Desargues was aware of Aleaume's and Vaulezard's work, at least he did not copy their constructions of the scales (captions of figures IX.9, IX.13, and IX.18–19). Finally, Desargues should receive credit for extending the use of scales to three-dimensional figures, because earlier works had only applied scales to plane figures.

This section has recounted what could be called the first act in the drama about Desargues's perspective method. The second act unfolds in section IX.9.

IX.8 The Work of Niceron

During the golden period of French perspective the art of making perspectival anamorphoses got its first proper textbook. It was written by the Minim priest Jean François Niceron (1613–1646), depicted in figure IX.33. He was – to use Michael S. Mahoney's precise expression – "sympathetic to the natural magic still current at his time ... [and] tended to view optics as the art of illusion rather than the science of light" (Mahoney[S] 1974, 104). This attitude is reflected in the title of Niceron's book: *La perspective curieuse, ou magie artificiele des effets merveilleux* (The curious perspective, or the artificial magic of marvellous effects, 1638) – the marvellous effects being anamorphoses. Niceron's original intention had been to devote his entire work to anamorphoses (Niceron 1638, preface, 4). However, he also wished to connect the geometric understanding of anamorphoses to the theory of perspective, and therefore engaged in a study of perspective in which he familiarized himself with seventeen books on the subject. Like many other authors on perspective, Niceron was dissatisfied with what he had read, and therefore decided to begin his work on anamorphoses with a section on perspective intended to help the layman. He was especially disappointed at finding no detailed descriptions of how to construct perspective images of the Platonic bodies – objects that since Antiquity have been connected to the wonders of science and creation.

Niceron chose to present the distance point method (figure IX.34) and demonstrate a number of applications, dealing in particular with how the regular, and some semiregular, polyhedra are thrown into perspective. Niceron seems to have achieved what he aimed for: an introduction to perspective that offers readers an opportunity to understand the *why* of the rules without scaring off those unacquainted with geometry.

In chapter II we saw how Piero della Francesca constructed anamorphoses by projecting a virtual three-dimensional object upon a horizontal plane situated behind the object. This procedure was not taken up by his successors, who instead dealt with the problem of how a given drawing can be projected so that its image is an anamorphosis. The normal procedure was, as noted, to assume that the drawing was placed in a vertical plane and to equip this plane with a grid of squares. From a given eye point, the grid was projected upon the plane of the anamorphosis – which in Niceron's examples was a wall

FIGURE IX.33. Portrait of Niceron. The background shows the Roman church *Trinità dei Monti*, to which Niceron was attached for some time. Niceron 1638/1652.

perpendicular to the drawing. The essential problem was then to construct the image of the grid. Niceron stressed that this construction procedure is analogous to determining the perspective image of square tiles in a floor (Niceron 1638, 52).

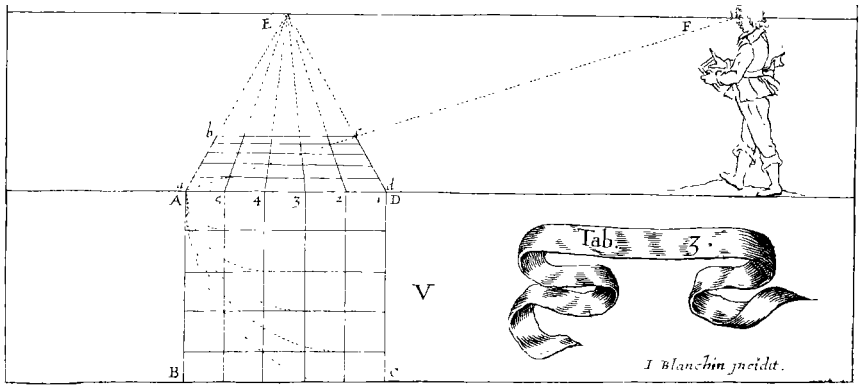

FIGURE IX.34. Niceron's presentation of a distance point construction. Niceron 1638/1652, table 3.

Niceron's Construction of an Anamorphic Grid

The principle behind Niceron's construction is the following (figure IX.35). Let the vertical plane ε contain a grid of squares with the diagonal LN – for the sake of simplicity I have included only four squares. Further, let O be the eye point, P its orthogonal projection upon the picture plane π (that is, the wall), and D the point above P on the vertical through P determined by $DP = OP$. This implies that P is the principal vanishing point, and since the horizontal lines of the grid are orthogonals, they are projected into lines passing through P. The vertical lines of the grid are parallel to the wall, and hence their images are vertical lines whose position can be determined by looking at the diagonal LN. This diagonal has D as its vanishing point and L as its intersection point, and hence it is mapped upon DL. As in any ordinary distance point construction, the points in which the line DL meets the images of the orthogonals determine the positions of the images of the lines parallel to π. By and large, Niceron's description is similar to the one just given, and his construction is reproduced in figure IX.36, with a more elaborate illustration from 1646 shown in figure IX.37.

As mentioned in section IX.3, Niceron also presented a mathematically exact construction of an anamorphic grid for cylindrical mirror anamorphoses, namely the one developed by Vaulezard. Even so, he advocated the use of a simpler grid, reproduced in figure IX.38.

Having written a book on perspective and anamorphoses for practitioners, Niceron decided to also attempt to reach a more erudite circle of readers in an expanded Latin version of *La perspective curieuse*, in which he included more theoretical material – and more illustrations. This second version was published

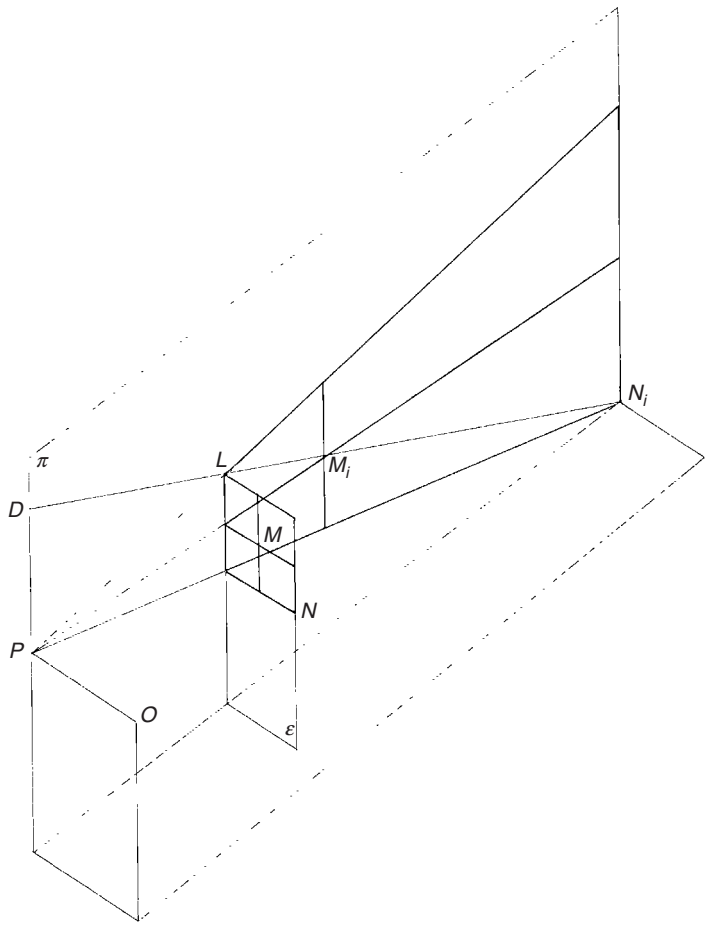

FIGURE IX.35. A grid of squares projected upon an anamorphic grid.

under the title *Thaumaturgus opticus seu perspectiva curiosa* (Thaumaturgic[19] optics or the curious perspective) in 1646, the year of Niceron's death. Actually, he had started to translate the new version into French, but did not finish the project before he died. It was initially carried on by Niceron's former teacher Marin Mersenne, but in 1648, he too died without completing the translation. Gilles Personne de Roberval then took over the project and saw the second edition of *La perspective curieuse* through the press. The book finally appeared in 1652 and in a couple of later reprints. One of the new themes Niceron took up in his second edition was the use of instruments.

[19] *Thaumaturgus* means wonder-working.

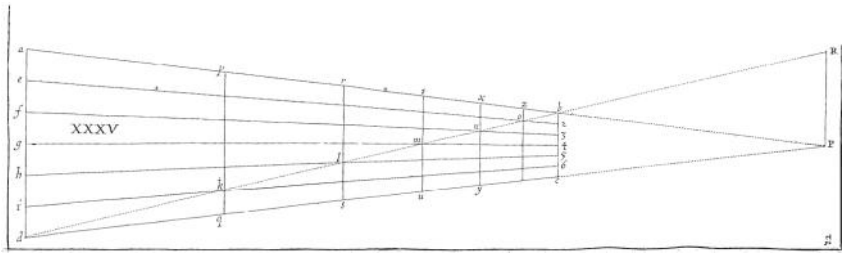

FIGURE IX.36. Niceron's illustration of how to construct an anamorphic grid. Niceron 1638, figure 35.

Niceron not only wrote about anamorphoses, he also had some designed for the Minim convent at Place Royal in Paris (Baltrušaitis[S] 1977, 50, 150). Moreover, he inspired the creation of an anamorphosis at the then Minim convent in Rome, *Trinità dei Monti*, where he was appointed professor of mathematics in 1639. The anamorphosis was carried out by Emmanuel Maignan (1601–1676), who also worked at the convent in Rome, and who

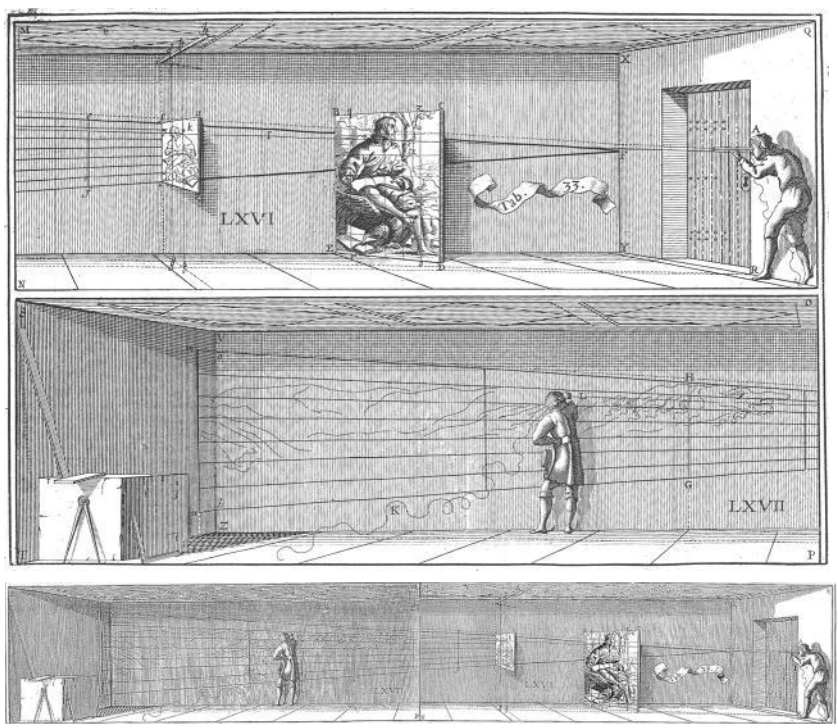

FIGURE IX.37. An anamorphic projection. The upper layout is Niceron's own arrangement of the figures, and the lower shows the two diagrams horizontally joined. Niceron 1646, figures 66 and 67.

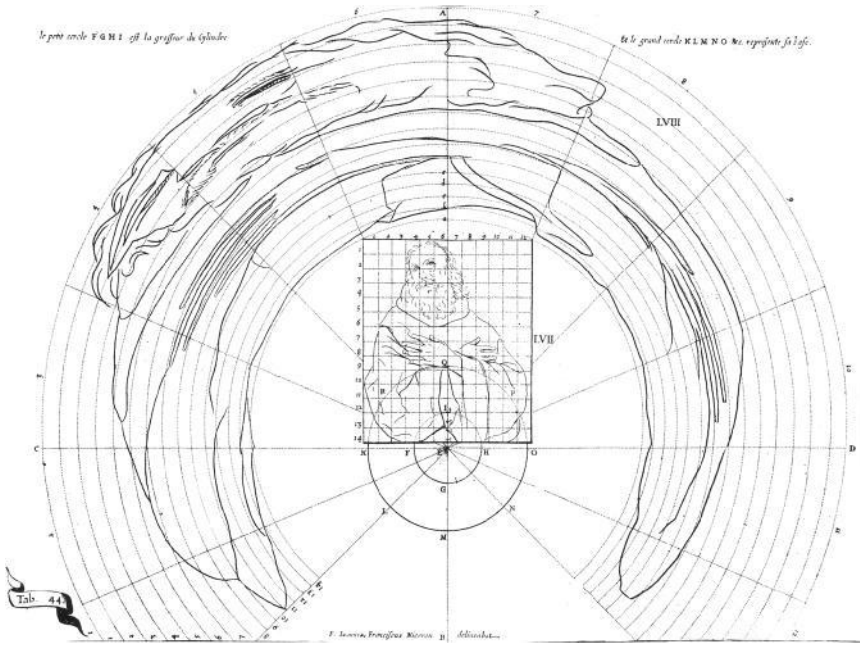

FIGURE IX.38. Niceron's grid for a cylindrical mirror anamorphosis. He drew the lines intended to appear as verticals as lines radiating from the point *E*; and the lines meant to appear as horizontals he constructed as circles with centre *E*, and with radii that increase at a ratio of 21:20 (Niceron 1638, 85). The person depicted is Saint Francis of Paola (Baltrušaitis[S] 1977, 147). Niceron 1638, figures 57 and 58.

shared Niceron's admiration for 'natural magic'. Maignan took an almost obsessive interest in sundials and wrote a comprehensive volume on their construction, in which he included a small section on anamorphoses, describing the one at *Trinità dei Monti* (Maignan 1648). This anamorphosis is extremely impressive and can still be admired where it was created – as can one of Maignan's sundials. Viewed from the eye point the anamorphosis shows a picture of the founder of the Minim Order, Saint Francis of Paola (figure IX.39), whereas seen from other positions it recounts the story of his dangerous crossing of the Strait of Messina (figure IX.40).

IX.9 Second Act of the Desargues Drama

Before returning to the further fate of Desargues's method, I will briefly describe a book that differs from other perspective works published in France during the 1630s and 1640s. Almost all such works appeared in Paris and applied either the classical distance point method or perspective scales. Apparently independently of – though presumably stimulated by – the